Others 12.5

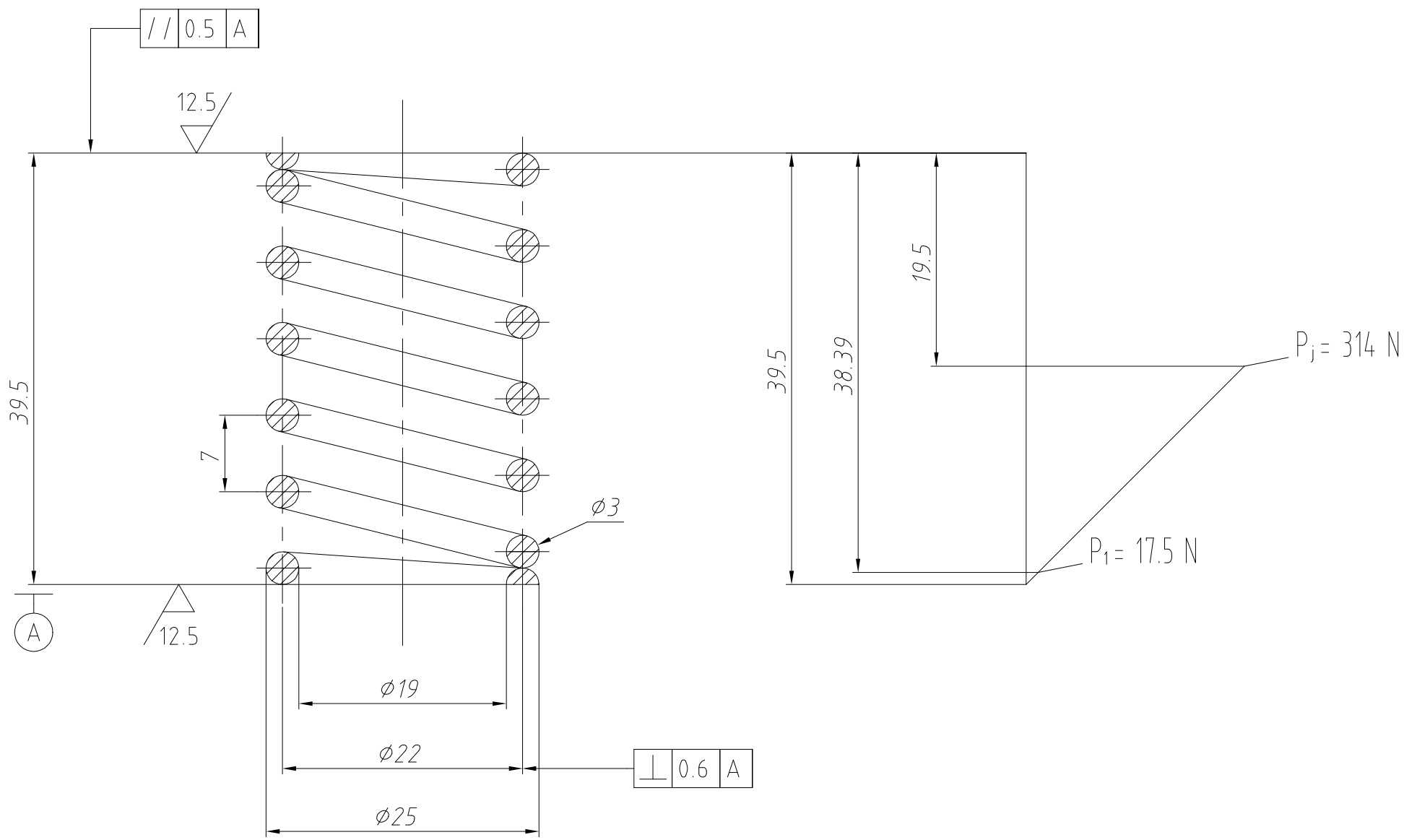

Technical requirements

1. Rotation direction: right rotation.
2. Effective laps: 5 laps; Total laps: 7 laps.
3. Deployment length: L=486.
4. Uneven pitch between turns is less than 1 mm..
5. The manufacturing accuracy of main parameters is Grade 2 GB1239.2-89.
6, both ends and tight grinding, bearing ring is 1.
7, spring stress relief tempering treatment.

					1Cr18Ni9			MESNAC CO., LTD
Mark	Number	Modified file No.		Signature	Date			Spring
Designer			Standarder			Mark	Weight	Scale
Checker			Approver			C	0.03	2:1
Verifier			Security Classfication		止			03DTG0700004
Processer			View			Total No.	No.	TXJ1151.2-1